Art.-Number: 701965

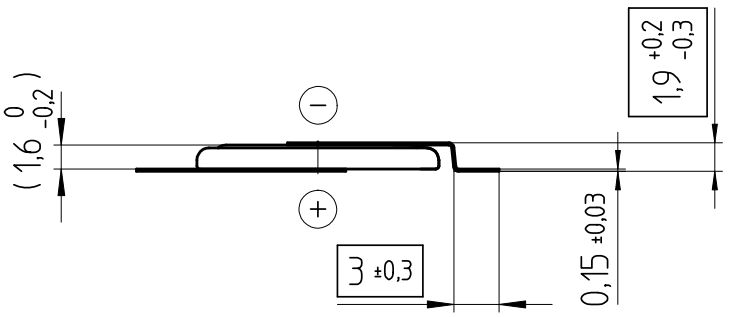

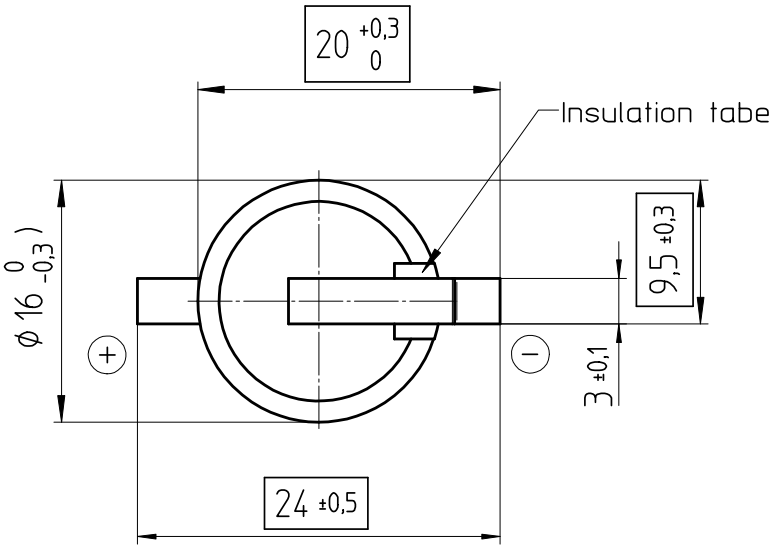

Tab material: Isotan (54%Cu,44%Ni,Mn)

- Samples can deviate in the execution from the serie.

- Dimensions and tolerances can be specified only after the testing of the devices for the mass production definitely

All framed values will be used for dimension checking !

Rev.				Rev.					Customer's Approval		
Rev.				Rev.					Date		
Rev.				Rev.					Signature		
Titel: CR1616SM								Scale 2:1	Drawn	05.11.07	SRi
									Checked	06.11.07	BBö
									Approved		

renata batteries

CH-4452 Itingen
Switzerland

3.9196.4-